IF15-IIW EXPLODED VIEW

IF15-IIW

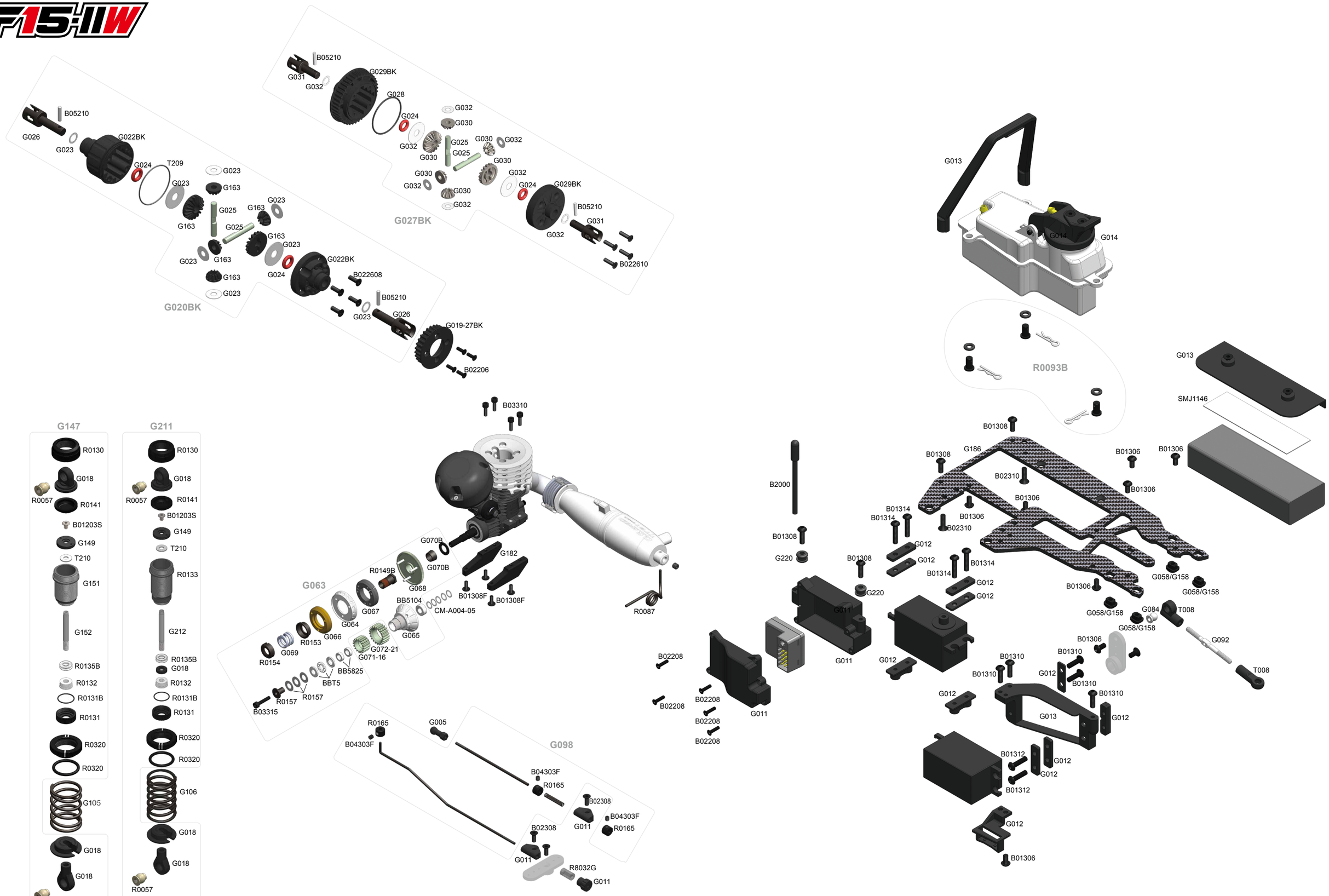

IF15-IIW

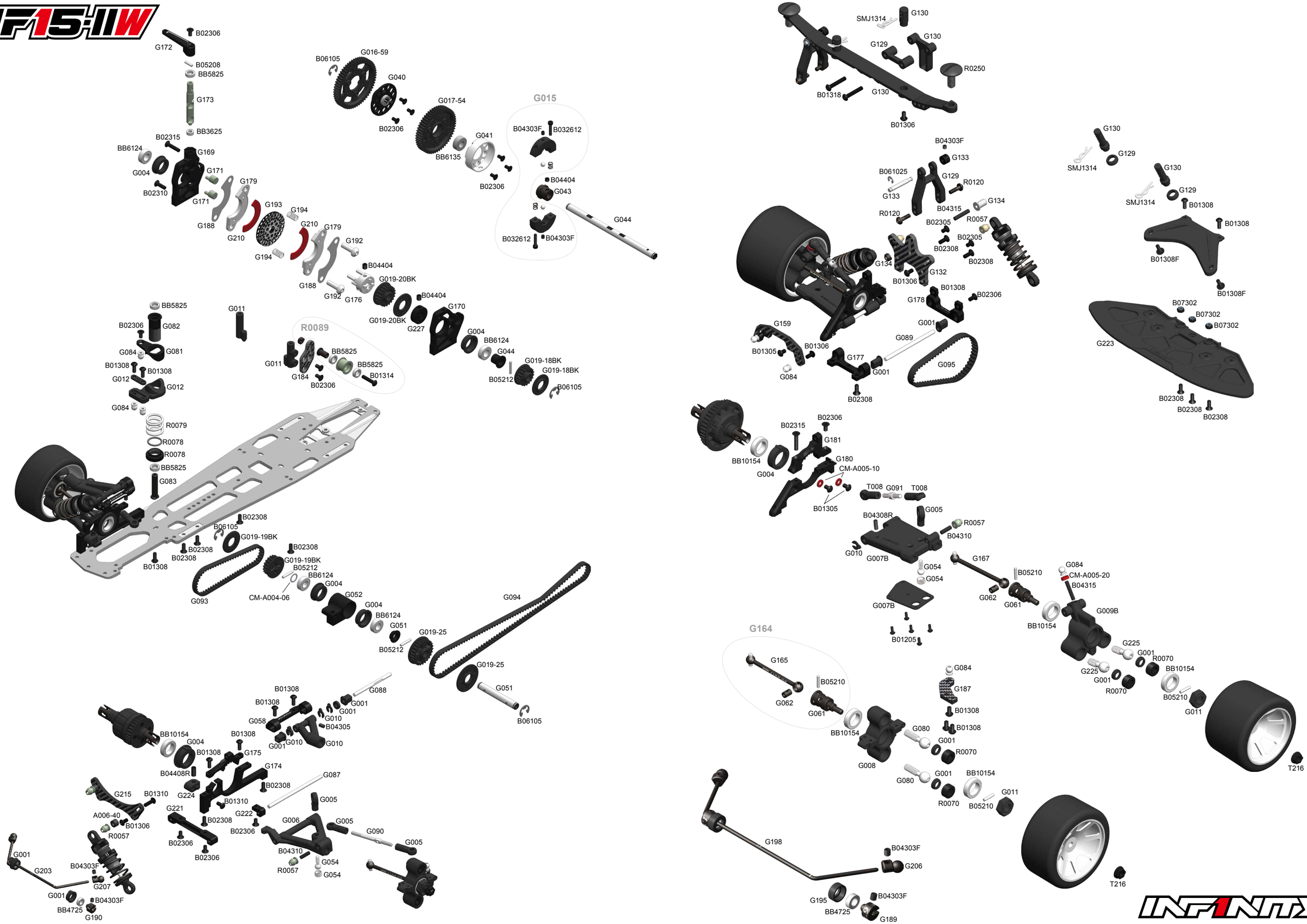

INFINITY